EUROSPAND

FARM EQUIPMENT SINCE 1970

DOUBLE DISC FERTILIZER SPREADER

EUROSPAND

FARM EQUIPMENT SINCE 1970

Born in the 70's of the past century, the brand Eurospand has always stood out with success for the special attention paid to produce and supply professional fertilizer spreaders characterized by structural sturdiness, precision of distribution, resistance to corrosion, continuous and constant technical innovation, making these features the core of its way of thinking.

In 2001 OMB invented and produced the Vibro System, a vibrating hopper bottom system that has been applied on all its production of double disc spreaders with great success since then.

The plant covers an area of 8500 metres of indoor space and is powered by a photovoltaic solar station that generates 730 kWp and an annual average capacity of 900,000 kW.

Inside the plant, under the strict control of a UNI EN ISO 9001 certified system, we carry out 100% of the mechanical and electronic design and we produce 90% of all parts and semi-processed particulars necessary to build our fertilizer spreaders.

UNI EN ISO **9001:2015**

CERTIQUALITY

SISTEMA DI GESTIONE
QUALITÀ CERTIFICATO

ACCREDIA
L'ENTE DI ACCREDITAMENTO

CERTIQUALITY
È MEMBRO DELLA
FEDERAZIONE CISQ

Why choose Eurospand?

David, Galileo, Jolly, Elettra: the double disc fertilizer spreaders of the **Eurospand** brand, are the ideal aid for the correct and accurate distribution of mineral fertilizers, organic amenders and seeds.
A correct fertilizer distribution is not a cause of pollution: on the contrary it is indispensable help for **better farming**.

VIBRO SYSTEM

Vibrant hopper Bottom without agitator.

LATERAL FEEDING

Optimal distribution also un uneven grounds.

DOSAGE AND DISTRIBUTION

Micrometric dosage and self-positioning of the launch angle.

TPS

Protection of the fertilizer spreader gearbox.

STAINLESS STEEL ANTI-CORROSIVE

Last over the years: stainless steel and up-to-date anticorrosive treatments.

HYDRAULIC OPENINGS

Standard on all the models with two options at customer's choice.

ELECTRONIC

Self-regulation of the dosage on the variation of the speed.

WEIGHING SYSTEM

Real-time weighing of the substance inside the hopper (+W versions).

BUILT-IN GPS

Integrated GPS for a comfy speed detection.

VIBRO SYSTEM without agitator

The system with vibrating hopper bottom that feeds continuously the distribution system. The non-use of agitators avoids the products crushing, assuring a **uniform dosage of the chosen quantities**, of granular, powdered and pelleted fertilizers and seeds.

The **two stainless steel grids** applied above the vibrating bottom retain the fertilizer lumps and **maintain constant the fertilizer pressure on the feed system**.

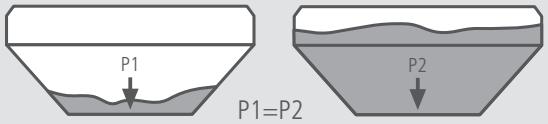

VIBRO-SYSTEM solves the issues related to:

- Break of granules of fertilizers or seeds
- Heat and formation of lumps
- Distribution of all type of fertilizer also with critical weather conditions
- Constancy on the dispensed quantities, the system makes irrelevant the hopper filling degrees from the dispensed quantity

EUROSPAND
FARM EQUIPMENT SINCE 1970

LATERAL FEEDING

Feed the fertilizer laterally to the vane, **means elimination of the granule brake and powdering** during distribution.

The products are conveyed on the vanes with a progressive acceleration, creating a regular and continuous flux, **also on uneven grounds**, where the traditional systems with outflow of the fertilizer from above cannot assure transversal smoothness.

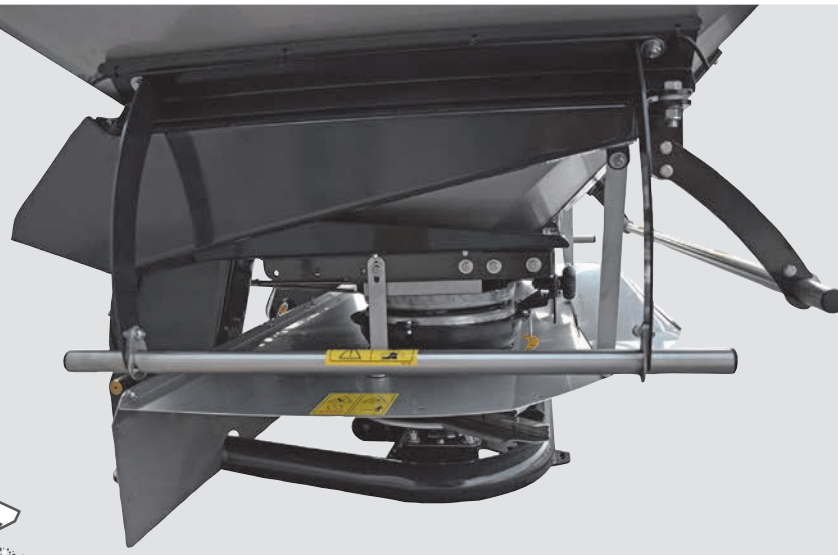

ANTITURBOLENCE

Moulded vanes with patented cadges and a stainless-steel barrier above the spreading discs. Two of our winning choices ever for an optimal transversal distribution.

DOSAGE and DISTRIBUITION

A system of **automatic positioning** optimises the entrance of fertilizer on the spreading disc depending on the dispensed quantity increase.

It is possible to **act manually** on the advanced or lateness egress of fertilizer on the disc, to compensate for different physical features of fertilizers.

PERFECT DISTRIBUTION WITH DOUBLE OVERLAP

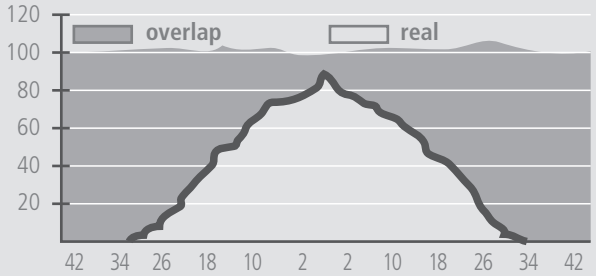

COEFFICIENT OF VARIATION

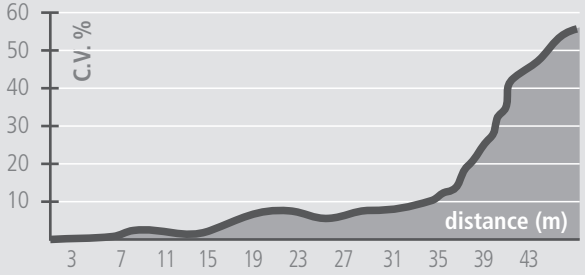

Shutters in stainless steel with **variable-geometry** openings allow to obtain an adequate dosage curve both for micro-quantities and large injections.

NPK 15-15-15 DOSAGE CURVE

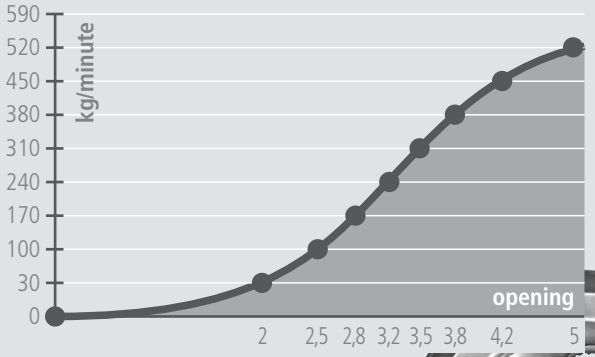

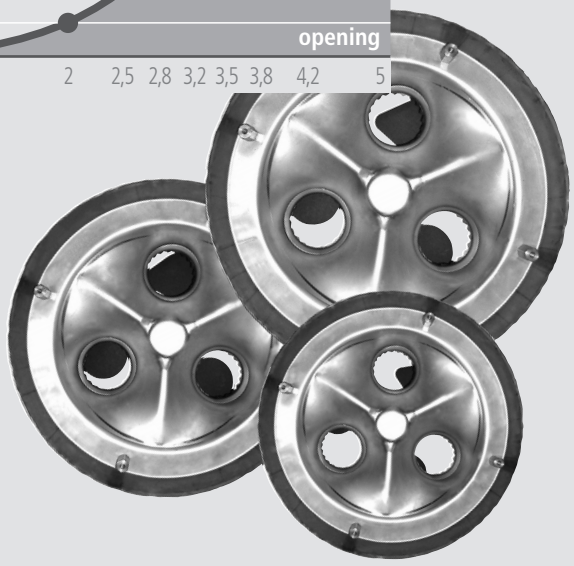

EUROSPAND
FARM EQUIPMENT SINCE 1970

TPS Fertilizer Spreader Protection system

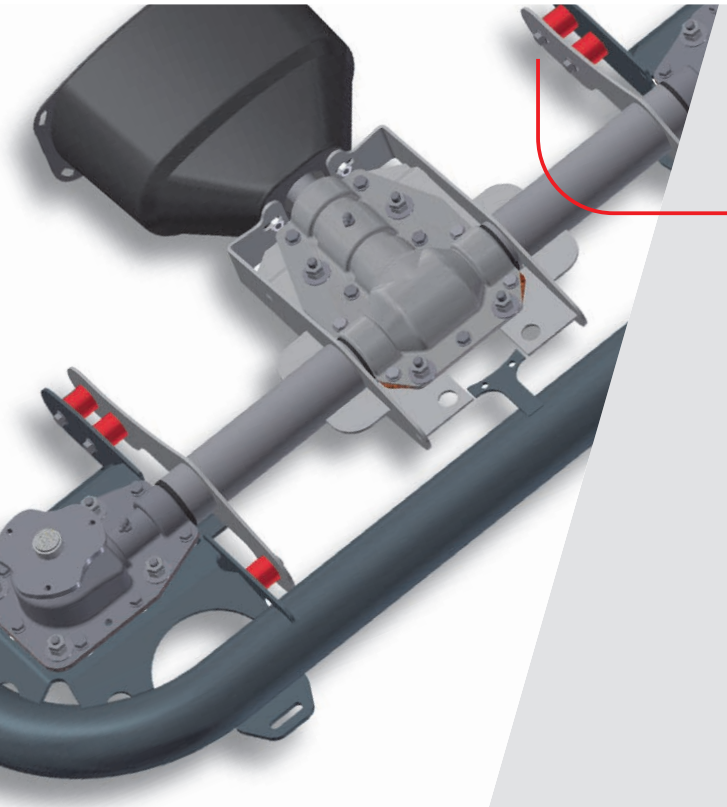

The *Transmission Protection System* **avoid any damage to the transmission shafts when the PTO shaft does not have the correct length**.

The central box is anchored to the chassis through six **rubber mountings** that absorb anomalous bending borne by the input shaft.

High-strength moulded and tempered gears

HYDRAULIC OPENING and CLOSING

OPTION 1 – One DE distributor

The independence of the left and right circuit is obtained by the actuation of the valves.

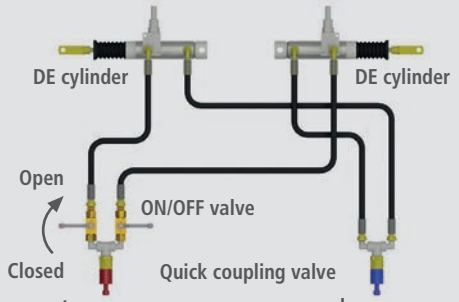

Hydraulic cylinders with double-effect stainless steel stems and relief valves.

OPTION 2 – Two DE distributors

The indepence of the left and right circuit is obtained directly by using the tractor's control levers.

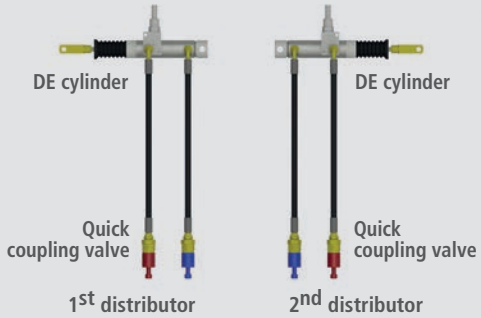

INOX

STAINLESS STEEL

The components of the feeding, measuring and distribution systems, as well as all the bolts are made in **stainless steel** as a guarantee of a long life.

All the metal parts not in stainless steel undergo a sandblasting and **powder coating procedure with double applications and heating at 220° C**.

Curved tubes and conveniently shaped round edges **avoid the sediment of powders of fertilizer and facilitate washes** on every frame and hopper parts.

EUROSPAND
FARM EQUIPMENT SINCE 1970

ELECTRONIC +W WEIGHT SYSTEM

- Position magnetic sensor
- Horizontal connecting rod
- Loading cells
- Linear actuators
- Weighing system frame

The required dosage **is automatically adjusted according to the forward speed** (Forward Speed Calibration) by means of two linear actuators.

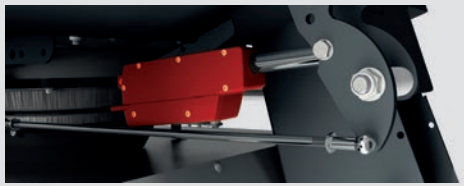

Two magnetic sensors detect the exact opening of each shutter and control directly the linear actuators avoiding any possible error of position.

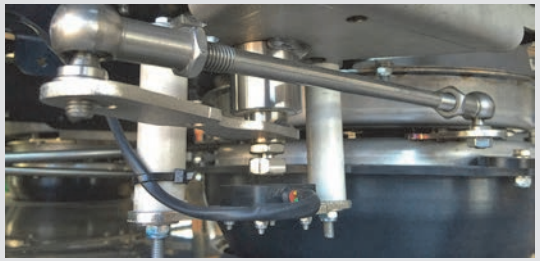

The system enables the instantaneous **variation** of the applied dosage, the **interruption of spreading on one side**, the **verification of the quantity and worked hectares** directly and comfortably from the tractor's seat.

The versions "+W" with a **double frame integrates two load cells, 5 tons each**, that detect the real weight of the product in the hopper in a continuous way, reporting every fertiliser and every physical variation to a distribution curve in order to deliver the exact quantity per hectare required.

The two load cells positioned in the hitching lower area of the spreader detect **precise values also in presence of inclined fields up to 12% in all directions**.

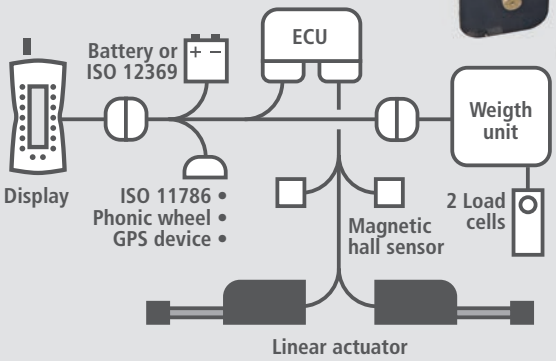

EUROSPAND

DAVID FRUIT

VIBRO SYSTEM

LATERAL FEEDING

DOSAGE AND DISTRIBUITION

TPS

INOX
STAINLESS STEEL ANTI-CORROSIVE

HYDRAULIC OPENINGS

ELECTRONIC

+W
WEIGHING SYSTEM

m
max 12
SPREADING WIDTH FULL-FIELD

m
2–5
INTER-ROW DISTRIBUTION

L
1000
800
600
CAPACITY

+W kg
252 332
236 316
220 300
WEIGHT

The maximum versatility.

This model with only **1,2 meters of width** is ideal for the **intensive fertilization in orchards and vineyards rows from 2 up to 5 metres**.

Designed for the localized inter-row distribution *David Fruit*, thanks to a stainless-steel module conveyor, enables to transform quickly and be adaptable for different types of distribution.

It takes just one minute to extract the carter and transform the spreader for the full-field distribution with spreading width up to 12 meters.

With the application of **two rear shutters** (optional) it is possible **to fertilize** also at **the centre of the rows, in green-houses and l/r borders**.

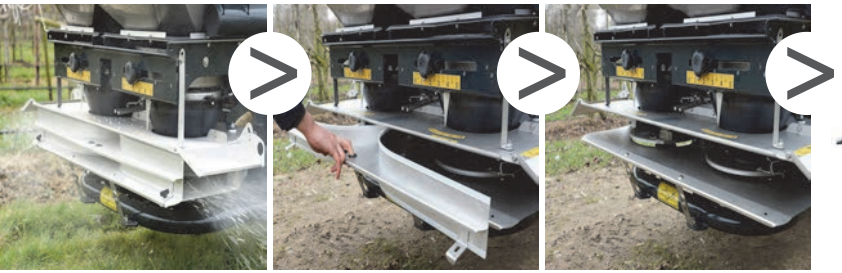

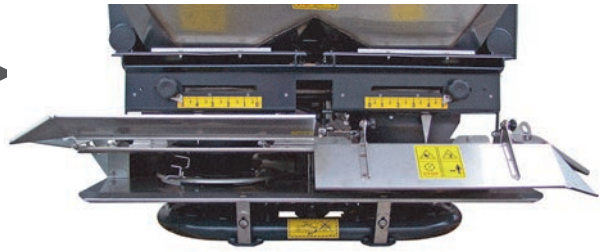

Fast variation of distribution from INTER-ROW to FULL-FIELD.
Unscrew two knobs and pull out the inside casing: the David Fruit turns into its open-field distribution version.

JOLLY FRUIT

VIBRO SYSTEM | LATERAL FEEDING | DOSAGE AND DISTRIBUITION | TPS | STAINLESS STEEL ANTI-CORROSIVE | HYDRAULIC OPENINGS | ELECTRONIC | WEIGHING SYSTEM | MAX SPREADING WIDTH FULL-FIELD | INTER-ROW DISTRIBUTION | CAPACITY | WEIGHT

The high load capacity and spreading width make this model ideal **for the intensive fertilization of olive plantations, groves and palm groves**.

Designed for the localized inter-row distribution ***Jolly Fruit***, thanks to a stainless-steel module conveyor, enables to transform quickly and be adaptable for different types of distribution.

It takes just one minute to extract the carter and lift the two lateral extensions and transform the spreader for the full-field distribution with spreading **width up to 18 meters**.

As for the *David Fruit* model with the application of two rear shutters it is possible to fertilize also at the centre of the rows, in green-houses and l/r borders.

The switch from BILATERAL LOCALISED distribution to FULL-FIELD distribution is carried out **in three easy and quick steps**.

EUROSPAND

DAVID

VIBRO SYSTEM | LATERAL FEEDING | DOSAGE AND DISTRIBUITION | TPS | STAINLESS STEEL ANTI-CORROSIVE | HYDRAULIC OPENINGS | ELECTRONIC | MAX SPREADING WIDTH | CAPACITY | WEIGHT

*optional kit of vanes

Little dimensions, great contents.

Model with reduced dimensions, for needs of fertilizer and sowing of **mid- little agricultural and sports areas**.

David, even though his compact dimensions, results **extremely strength**, supporting **useful loads up to 1200 kg** and it is ideal to be used with small-mid power tractors **with I and II hook category in two different positions**.

GALILEO

VIBRO SYSTEM | LATERAL FEEDING | DOSAGE AND DISTRIBUITION | TPS | STAINLESS STEEL ANTI-CORROSIVE | HYDRAULIC OPENINGS | ELECTRONIC | MAX SPREADING WIDTH | CAPACITY | WEIGHT

The essence of functionality.

Model with **lowered hopper** and reduced high, enables easy loading from bags and buckets, offering, at the same time, an **interesting loading capacity up to 1600 L**.

Strong frame with useful loads up to **1900 kg** and II category hitches with **two hitching positions**.

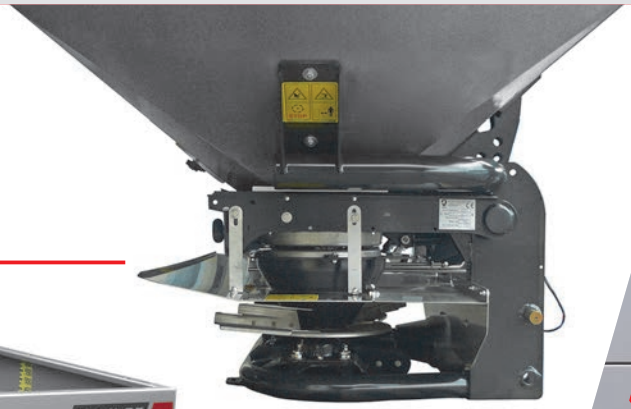

Plexiglas doors on the back.

Manual device to spread along fields borders (optional).

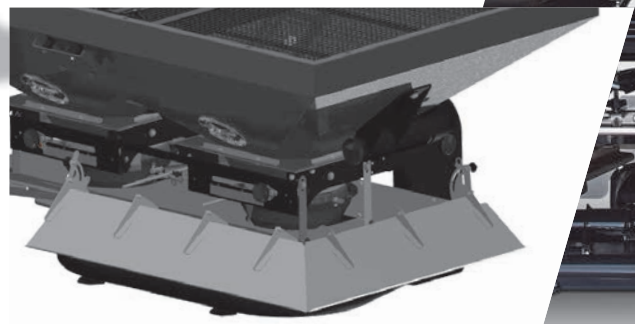

EUROSPAND

JOLLY 18

VIBRO SYSTEM | LATERAL FEEDING | DOSAGE AND DISTRIBUITION | TPS | STAINLESS STEEL ANTI-CORROSIVE | HYDRAULIC OPENINGS | ELECTRONIC | WEIGHING SYSTEM (*) only JOLLY 18 | MAX SPREADING WIDTH | CAPACITY | WEIGHT

Super-professional Models

Models with mid-high load capacity and working width, for reasons of fertilizations and sowing of large agricultural areas.

Internal support structure: standard applied on all our double disc models, this supporting central structure incorporates four safe hooks for the spreader lift and set up for fixing the **folding filtering grids** (optional).

Frame: structural strength with **useful loads up to 3600 kg**. I and II category hook and versatility hooking in three different positions; normal, 100 mm moved; or 150 raised for **late injections.**

Plexiglas doors: The Plexiglas doors positioned on the rear side of the hopper allow easy access to the sieving grids to eliminate possible foreign matter.

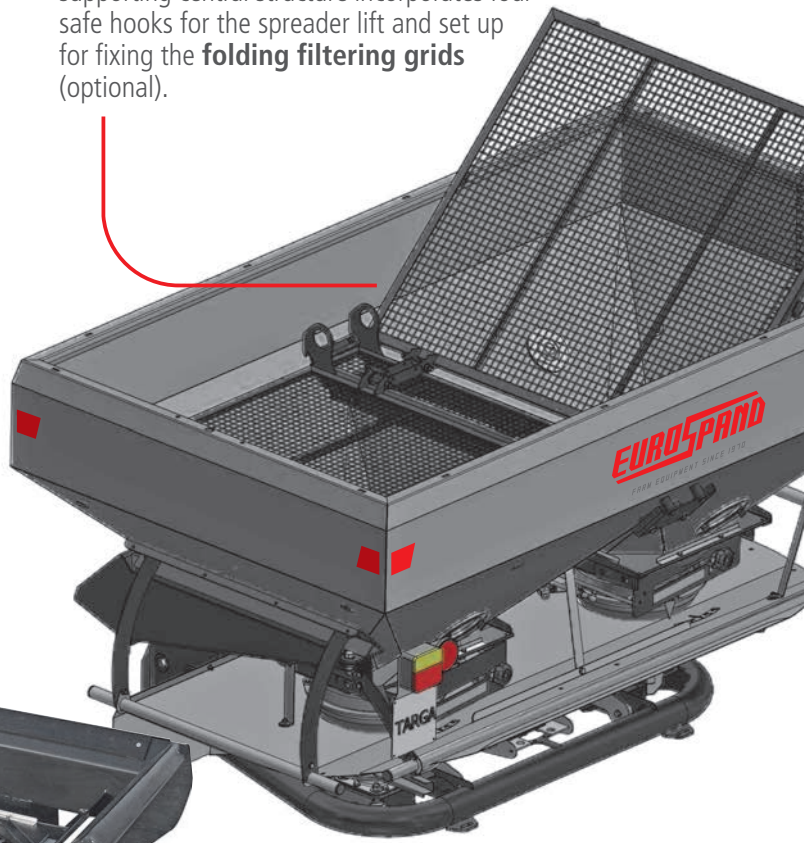

**con kit palette opzionale

JOLLY 24 28 32

MAX SPREADING WIDTH	CAPACITY	WEIGHT
m 24/28/32	L 3000 2000 1400	kg 580 500 460

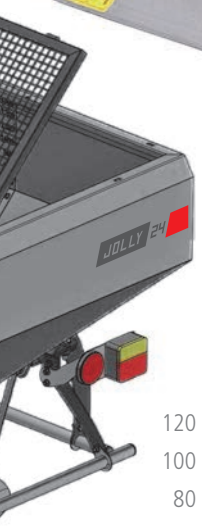

Device for borders: hydraulic device for fertilization on the right side of areas (optional)

PERFECT DISTRIBUTION RIGHT SIDE

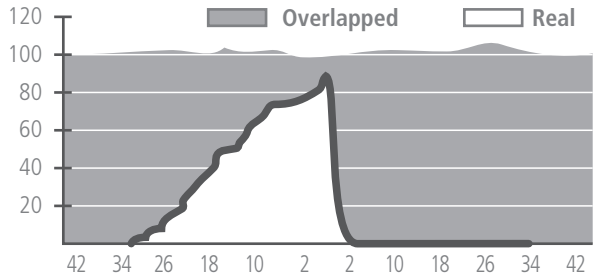

ELETTRA 24 32

VIBRO SYSTEM | LATERAL FEEDING | DOSAGE AND DISTRIBUITION | TPS | STAINLESS STEEL ANTI-CORROSIVE | HYDRAULIC OPENINGS | BUILT-IN GPS | WEIGHING SYSTEM | MAX SPREADING WIDTH (m) 24/32 | CAPACITY (L) 3000 2000 1400 | WEIGHT (kg) +W 600 710 520 630 480 590

360° technology

Elettra standard applies the **electronic system and in the (+W) versions the weighing system with load cells** to regulate the delivered quantity independently to the forward speed and to the fertilizer features to be distributed.

***Elettra* is provided with a double control, hydraulic and electric, for the flow opening and closing and its subsequent adjustment.**

The instantaneous opening and closing at the start of the field is guaranteed by **two DE hydraulic cylinders**, while the opening adjustment is controlled by **two linear actuators in continuous** time.

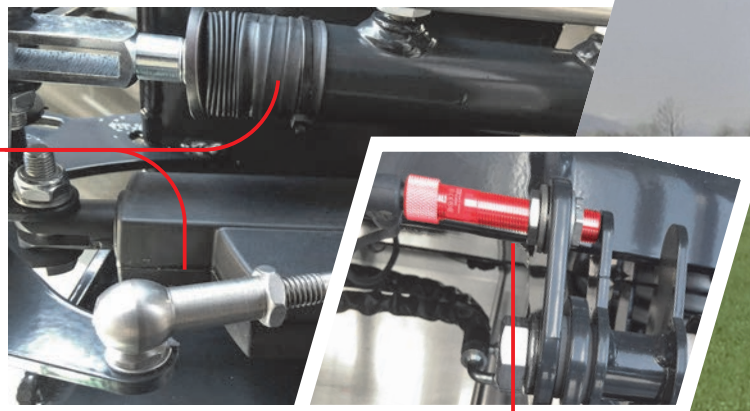

Two position sensors detect the **ON/OFF** status of the hydraulic system and therefore the distribution. In order to avoid spreading beyond a field limit, the **GPS** transmits the signal of distribution start after the tractor has run a distance from the beginning of the field equal to the spreading width of the fertilizer spreader.

Two magnetic sensors detect the exact opening of each shutter, directly driving the linear actuators and cancelling every possible position error.

EUROSPAND
FARM EQUIPMENT SINCE 1970

BUILT-IN GPS and WEIGHT SYSTEM

A 7-Inch Multifunction Colour Monitor **integrates a GPS antenna** that detects and transmits the real forward speed to the system without the need to get the signal from any ISO 11786 connectors or the use of wheel speed sensors.

Several spreading tables allow to create/change/save personalised fertilizations works and transfer them via **Bluetooth** for print or manage the reported of the executed works.

From the monitor the operator modifies the quantity/hectare instantaneously, activates the border spreading and visualizes the characteristics of the job in execution, the treated hectares, the remaining kgs, the warning of fertilizer low level, or the warnings concerning possible anomalies of the system.

The versions **(+W)** with double frame integrate **two load cells, 5 tons each**, that detect the real weight of the product in the hopper in a continuous way, reporting every fertiliser and every physical variation to a distribution curve in order to deliver the exact quantity per hectare required.

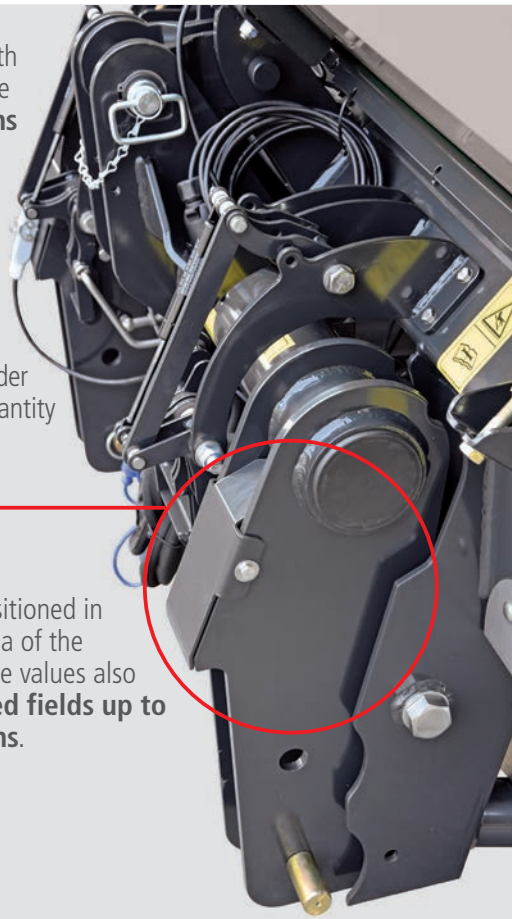

The two load cells positioned in the hitching lower area of the spreader detect precise values also in presence of **inclined fields up to 12% in all directions**.

EUROSPAND

ATTACHMENTS

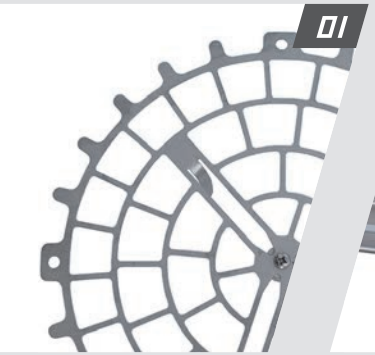

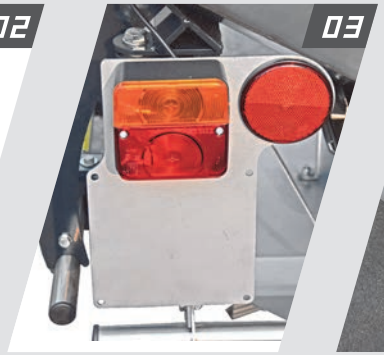

	DAVID	DAVID FRUIT	GALILEO	JOLLY	JOLLY FRUIT	ELETTRA
01 – GRID FOR ORGANIC AMENDERS	■	■	■	■	■	■
02 – LATERAL EXTENTIONS		■				
03 – ROAD LIGHTING SYSTEM	■	■	■	■	■	■
04 – DEVICE FOR BORDERS			■	■		■
05 – FIXED HOPPER COVERS	■	■	■	■	■	■
06 – TILTING HOPPER COVERS				■	■	■
07 – CONTROLLER	■		■	■		
08 – KIT OF VANES	■			■		■
09 – L/R SHUTTERS		■			■	
10 – WHEEL SUPPORT	■	■	■	■	■	■
11 – EXTRA FOLDING FILTERING GRID	■	■	■	■	■	■

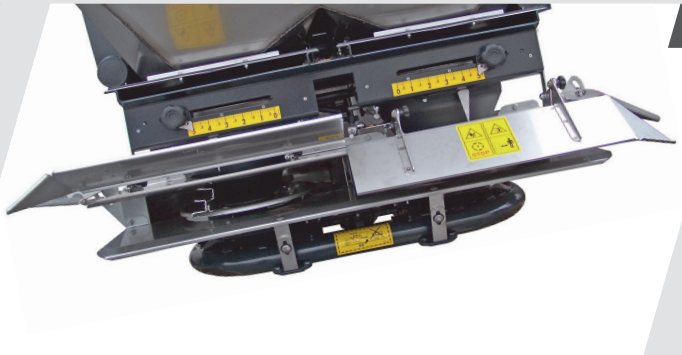

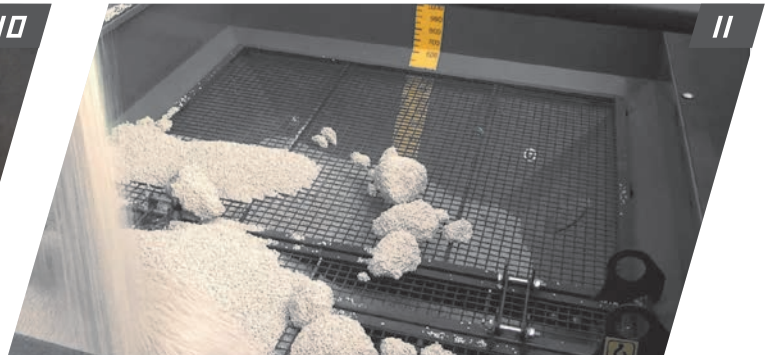

www.diegoviada.com 0120

DAVID DAVID FRUIT

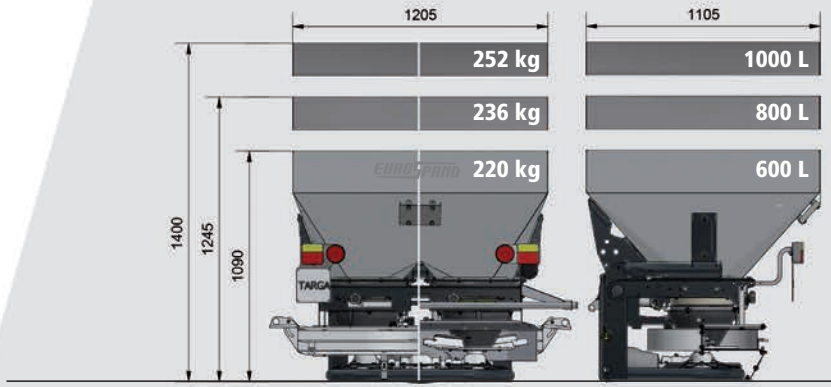

GALILEO

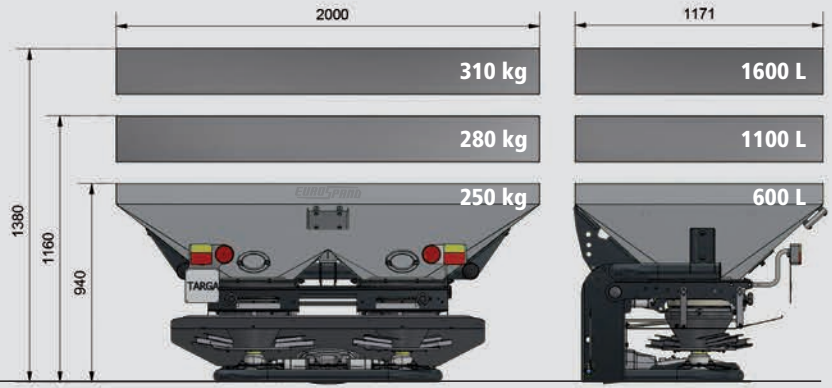

JOLLY 18 JOLLY FRUIT

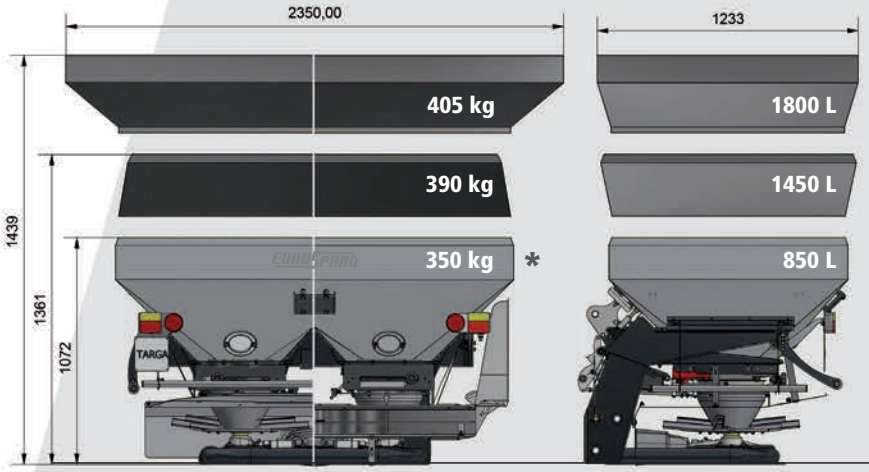

* Weight of *Jolly Fruit* version without electronic weighing system.

JOLLY 24 28 32 ELETTRA 24 32

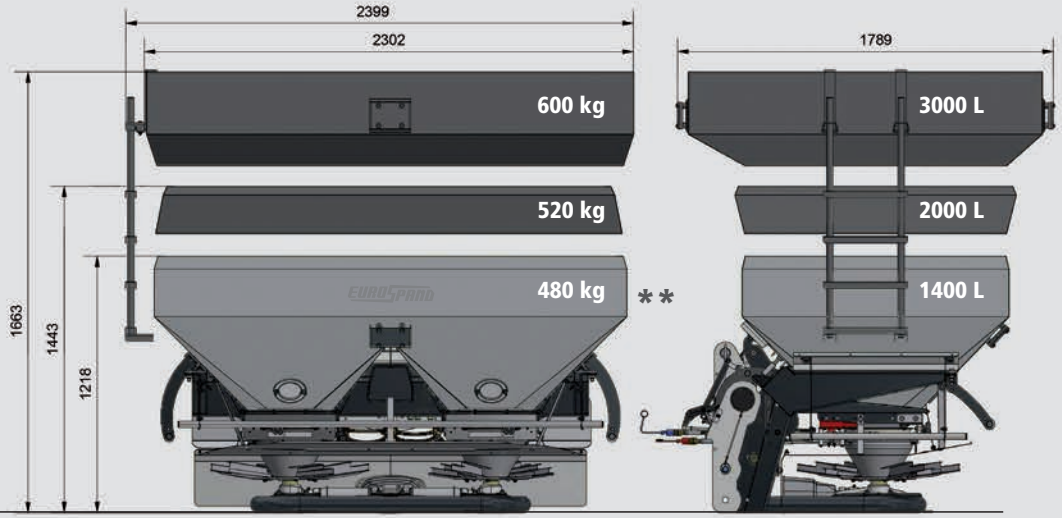

** Weight of *Jolly 24* version without management and weighing electronic system.

The description and illustrations written in this paper are to be considered as informative and not binding and can be changed without notice.

EUROSPAND

FARM EQUIPMENT SINCE 1970

Autotrasporti Cavallo Giordano & Vallauri spa
Divisione Macchine Agricole

Via Cuneo 153/155
12012 Boves CN – ITALY

Tel. +39 0171 391 511
Fax. +39 0171 391 507

omb@gruppocavallo.it
www.eurospand.it

MEMBER
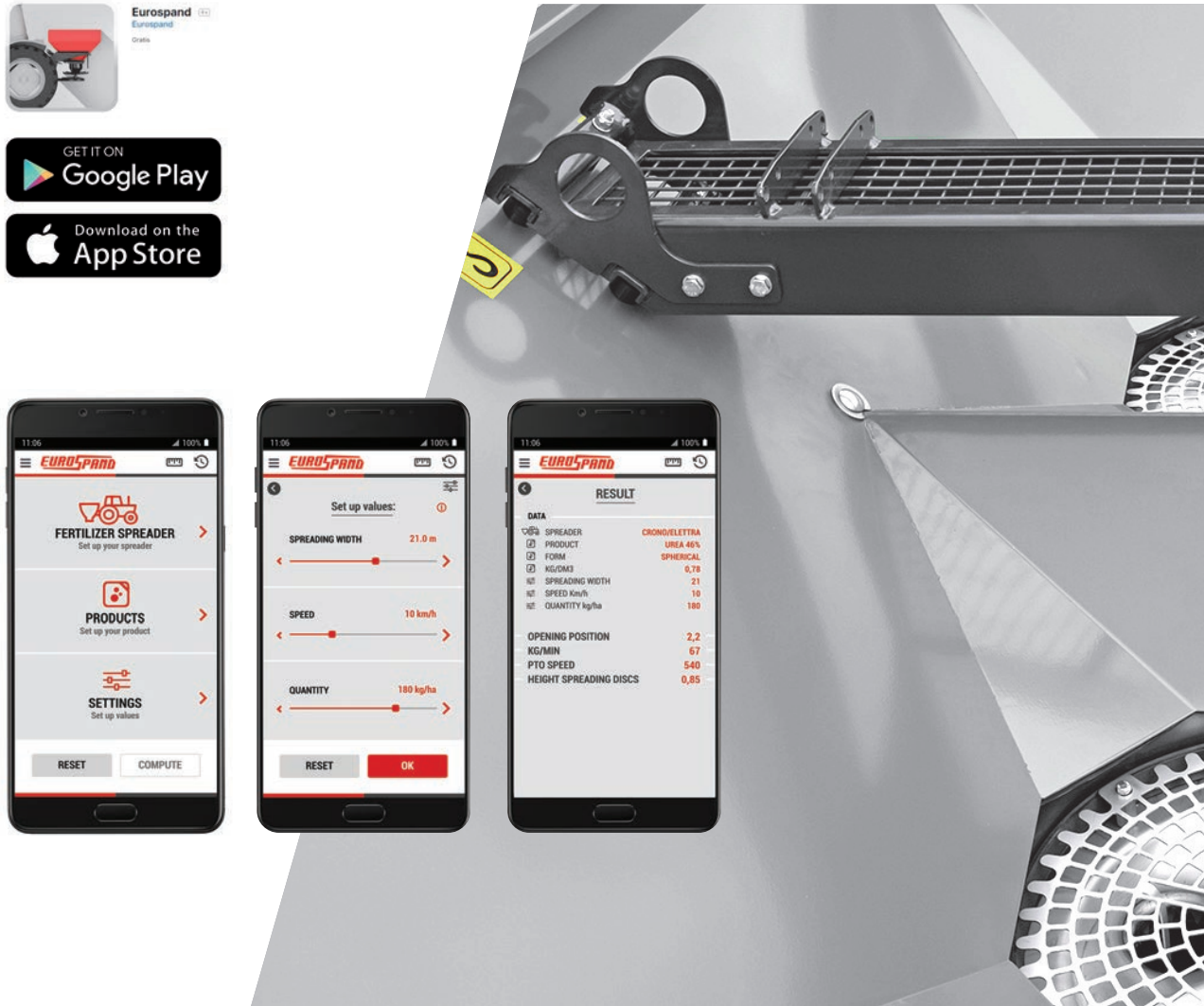
AGROITA partner